Work Order ID 69455

Wednesday, May 11, 2011 10:37:35 AM

Item ID: D206-642-541 **Accept** **Setup** **Start**

Revision ID: **Stop**

Item Name: Replacement Skidtube

Start Date: 5/11/2011 **Start Qty:** 1.00 **Cust Item ID:**

Required Date: 6/6/2011 **Req'd Qty:** 1.00 **Customer:**

Reference:

Approvals: **Process Plan:** _____ **Date:** 11-05-11 **Tooling:** _____ **Date:** _____ **Run** **Start**

QC: _____ **Date:** _____ **SPC (Y/N):** _____ **Date:** _____ **Stop**

Sequence ID/ Work Center ID	Operation Description	Set Up/ Run Hours	Tool ID	Tool #	Plan Code	Accept Qty	Reject Qty	Reject Number	Insp. Stamp
100	DOCUMENT CONTROL	0.00				N/A			
DC	**Memo**	0.00							
Document Control	Photocopy bluefile & type labels per PPP D206-642-541 CHG003								

Draw Nbr	Revision Nbr
D3274	D
IIN-D206-642	Rev M

Dart Aerospace Ltd

W/O:		WORK ORDER CHANGES					
DATE	STEP	PROCEDURE CHANGE	By	Date	Qty	Approval Chief Eng / Prod Mgr	Approval QC Inspector

Part No: _____ **PAR #:** _____ **Fault Category:** _____ **NCR:** Yes No **DQA:** _____ **Date:** _____

Resolution: _____ **Disposition:** _____ **QA: N/C Closed:** _____ **Date:** _____

NCR:		WORK ORDER NON-CONFORMANCE (NCR)						
DATE	STEP	Description of NC Section A	Corrective Action Section B			Verification Section C	Approval Chief Eng	Approval QC Inspector
			Initial Chief Eng	Action Description Chief Eng	Sign & Date			

NOTE: Date & initial all entries

Work Order ID 69455

Wednesday, May 11, 2011 10:37:35 AM

Item ID: D206-642-541 **Accept** **Setup Start** **Stop**

Revision ID:

Item Name: Replacement Skidtube

Start Date: 5/11/2011 **Start Qty:** 1.00 **Cust Item ID:**

Required Date: 6/6/2011 **Req'd Qty:** 1.00 **Customer:**

Reference:

Run Start **Stop**

Approvals: **Process Plan:** _____ **Date:** _____ **Tooling:** _____ **Date:** _____

QC: _____ **Date:** _____ **SPC (Y/N):** _____ **Date:** _____

Sequence ID/ Work Center ID	Operation Description	Set Up/ Run Hours	Tool ID	Tool #	Plan Code	Accept Qty	Reject Qty	Reject Number	Insp. Stamp
110		0.00							
Skidtubes	Skidtubes								
Skidtubes	**Memo**	0.00							

****VERIFY AND INSPECT THE MATERIAL PRIOR TO USE****

1- Bend FWD end of tube using bend prog D3274 FWD and foilo 10 as per dwg D3274, cut fwd end of tube with saw table setup D3274.

11-5-26

2- remove fwd indexing ridge as per dwg D3274. Prepare for welding

BE 11/06/03

3- weld fwd cap as per dwg D3274 and QSI004
AR Aluminum Rod Batch: M112860/M117456 BE 11/06/03

4- grind fwd cap weld on top surface only BE 11/06/03

5- Cut AFT end of tube at 170.9" as per dwg D3274 and deburr end.

6-Drill Aft cap pilot hole using DT8025

7 -Cleco DT8025 in position and install pilot hole drill Jig DT8742A,B,C,D. Drill 3/16" pilot holes as per Dwg D3274

8 -Remove inner indexing ridge on aft end of skidtube as per Dwg D3274 scribe batch #

9 -Open aft end cap holes to Ø0.208" as per Dwg D3274. Deburr aft end.

11-6-6

Dart Aerospace Ltd

W/O:		WORK ORDER CHANGES					
DATE	STEP	PROCEDURE CHANGE	By	Date	Qty	Approval Chief Eng / Prod Mgr	Approval QC Inspector

Part No: _____ **PAR #:** _____ **Fault Category:** _____ **NCR:** Yes No **DQA:** _____ **Date:** _____

Resolution: _____ **Disposition:** _____ **QA: N/C Closed:** _____ **Date:** _____

NCR:		WORK ORDER NON-CONFORMANCE (NCR)						
DATE	STEP	Description of NC Section A	Corrective Action Section B			Verification Section C	Approval Chief Eng	Approval QC Inspector
			Initial Chief Eng	Action Description Chief Eng	Sign & Date			

NOTE: Date & initial all entries

H:\fFORMS\Quality Assurance\approved QA\NCRWO RevE

Work Order ID 69455

Wednesday, May 11, 2011 10:37:35 AM

Item ID: D206-642-541 **Accept** **Setup** **Start**

Revision ID: **Stop**

Item Name: Replacement Skidtube

Start Date: 5/11/2011 **Start Qty:** 1.00 **Cust Item ID:**

Required Date: 6/6/2011 **Req'd Qty:** 1.00 **Customer:**

Reference:

Run **Start**

Approvals: **Process Plan:** _____ **Date:** _____ **Tooling:** _____ **Date:** _____

Stop

QC: _____ **Date:** _____ **SPC (Y/N):** _____ **Date:** _____

Sequence ID/ Work Center ID	Operation Description	Set Up/ Run Hours	Tool ID	Tool #	Plan Code	Accept Qty	Reject Qty	Reject Number	Insp. Stamp
114 QC Quality Control	QC5- Inspect part completeness to step on W/O **Memo**	0.00 0.00							8 11/06/07
116 QC Quality Control	QC10- Inspect visual per QSI004- ground welds **Memo**	0.00 0.00							8 11/06/07
120 HandFinish Hand Finishing	Chemical Conversion Coat per QSI005 4.1 **Memo**	0.00 0.00				1			B 11/06/07

Dart Aerospace Ltd

W/O:		WORK ORDER CHANGES					
DATE	STEP	PROCEDURE CHANGE	By	Date	Qty	Approval Chief Eng / Prod Mgr	Approval QC Inspector

Part No: _____ **PAR #:** _____ **Fault Category:** _____ **NCR:** Yes No **DQA:** _____ **Date:** _____

Resolution: _____ **Disposition:** _____ **QA: N/C Closed:** _____ **Date:** _____

NCR:		WORK ORDER NON-CONFORMANCE (NCR)						
DATE	STEP	Description of NC Section A	Corrective Action Section B			Verification Section C	Approval Chief Eng	Approval QC Inspector
			Initial Chief Eng	Action Description Chief Eng	Sign & Date			

NOTE: Date & initial all entries

H:\fFORMS\Quality Assurance\approved QA\NCRWO RevE

Work Order ID 69455

Wednesday, May 11, 2011 10:37:36 AM

Item ID: D206-642-541 **Accept** **Setup Start**

Revision ID: **Stop**

Item Name: Replacement Skidtube

Start Date: 5/11/2011 **Start Qty:** 1.00 **Cust Item ID:**

Required Date: 6/6/2011 **Req'd Qty:** 1.00 **Customer:**

Reference:

Approvals: **Process Plan:** _____ **Date:** _____ **Tooling:** _____ **Date:** _____ **Run Start**

QC: _____ **Date:** _____ **SPC (Y/N):** _____ **Date:** _____ **Stop**

Sequence ID/ Work Center ID	Operation Description	Set Up/ Run Hours	Tool ID	Tool #	Plan Code	Accept Qty	Reject Qty	Reject Number	Insp. Stamp
130	QC3- Inspect Part Finish	0.00				1	0	RE	11/06/07
QC	**Memo**	0.00							
Quality Control									
150		0.00							
Skidtubes	Skidtubes								
Skidtubes	**Memo**	0.00							
	1-Open Ø0.313" and 0.375" crossbolt spacer holes as per Dwg D3274						BB		11/06/07
	2-Deburr crossbolt spacer holes as per Dwg D3274 and blow out chips from inside the tube								
	3-Bond web in place as per Dwg D3274 & QSI 015. A/R□□Sikaflex-291□ 116945 □□ Sikaflex expire date:□ 12/9/15 □ Start:□ 11/06/08 □Time:□ 1:45 Finish:□ 11/06/14 □Time:□ 9:00 (Adhere for 12 hours)						BB		11/06/08

Dart Aerospace Ltd

W/O:		WORK ORDER CHANGES					
DATE	STEP	PROCEDURE CHANGE	By	Date	Qty	Approval Chief Eng / Prod Mgr	Approval QC Inspector

Part No: _____ **PAR #:** _____ **Fault Category:** _____ **NCR:** Yes No **DQA:** _____ **Date:** _____

Resolution: _____ **Disposition:** _____ **QA: N/C Closed:** _____ **Date:** _____

NCR:		WORK ORDER NON-CONFORMANCE (NCR)						
DATE	STEP	Description of NC Section A	Corrective Action Section B			Verification Section C	Approval Chief Eng	Approval QC Inspector
			Initial Chief Eng	Action Description Chief Eng	Sign & Date			

NOTE: Date & initial all entries

Work Order ID 69455

Wednesday, May 11, 2011 10:37:36 AM

Item ID: D206-642-541 **Accept** **Setup Start**

Revision ID: **Stop**

Item Name: Replacement Skidtube

Start Date: 5/11/2011 **Start Qty:** 1.00 **Cust Item ID:**

Required Date: 6/6/2011 **Req'd Qty:** 1.00 **Customer:**

Reference:

Run Start

Approvals: **Process Plan:** _____ **Date:** _____ **Tooling:** _____ **Date:** _____

Stop

QC: _____ **Date:** _____ **SPC (Y/N):** _____ **Date:** _____

Sequence ID/ Work Center ID	Operation Description	Set Up/ Run Hours	Tool ID	Tool #	Plan Code	Accept Qty	Reject Qty	Reject Number	Insp. Stamp
160	QC5- Inspect part completeness to step on W/O	0.00				1	0		BE 11/06/14
QC	Memo	0.00							
Quality Control									
170		0.00							
Skidtubes	Skidtubes								
Skidtubes	Memo	0.00							

1-Bend AFT end of tube using bend prog. D3274 AFT as per dwg D3274. Install drop pins in crossbolt spacer holes to maintain web position. BE 11/06/14

2- DRILL PILOT HOLES FOR WEARPLATES USING D3274-1T2
OPEN HOLES TO .297" . Deburr

3-DRILL TOE PIN HOLE .640" DIA AS PER DWG USING DT8935 FWD END OF TUBE
DEBURR INSIDE OF HOLE AS NECESSARY (DO NOT ENLARGE HOLES)
REMOVE ANY FOREIGN OBJECTS INSIDE OF TUBES

BE 11/06/25

4- Countersink crossbolt spacer holes as per Dwg D3274

5- prepare for welding

Dart Aerospace Ltd

W/O:		WORK ORDER CHANGES					
DATE	STEP	PROCEDURE CHANGE	By	Date	Qty	Approval Chief Eng / Prod Mgr	Approval QC Inspector

Part No: _____ **PAR #:** _____ **Fault Category:** _____ **NCR:** Yes No **DQA:** _____ **Date:** _____

Resolution: _____ **Disposition:** _____ **QA: N/C Closed:** _____ **Date:** _____

NCR:		WORK ORDER NON-CONFORMANCE (NCR)						
DATE	STEP	Description of NC Section A	Corrective Action Section B			Verification Section C	Approval Chief Eng	Approval QC Inspector
			Initial Chief Eng	Action Description Chief Eng	Sign & Date			

NOTE: Date & initial all entries

H:\fFORMS\Quality Assurance\approved QA\NCRWO RevE

Work Order ID 69455

Wednesday, May 11, 2011 10:37:36 AM

Item ID: D206-642-541 **Accept** **Setup Start** **Stop**

Revision ID:

Item Name: Replacement Skidtube

Start Date: 5/11/2011 **Start Qty:** 1.00 **Cust Item ID:**

Required Date: 6/6/2011 **Req'd Qty:** 1.00 **Customer:**

Reference:

Run Start **Stop**

Approvals: **Process Plan:** _____ **Date:** _____ **Tooling:** _____ **Date:** _____

QC: _____ **Date:** _____ **SPC (Y/N):** _____ **Date:** _____

Sequence ID/ Work Center ID	Operation Description	Set Up/ Run Hours	Tool ID	Tool #	Plan Code	Accept Qty	Reject Qty	Reject Number	Insp. Stamp
180	QC5- Inspect part completeness to step on W/O	0.00							
QC	Memo H-2.9 4.5° DP 11-6-14	0.00							
Quality Control									
190		0.00							
Skidtubes	Skidtubes								
Skidtubes	Memo	0.00							

1-Insert D2649 & D3275-1 crossbolt spacers. Weld as per QSI 004 and Dwg D3274. Remember to back drill each hole before welding the other side. Use aluminum rod

A/R☐☐Aluminum Rod☐ M112860 BG 11/06/28

3-Grind cross bolt welds flush as per Dwg D3274. 11/07/04

4-Counterbore 5/16" x 0.750" deep as per Dwg D3274 and deburr. BG 11/07/04

DP 11-6-25

Dart Aerospace Ltd

W/O:		WORK ORDER CHANGES					
DATE	STEP	PROCEDURE CHANGE	By	Date	Qty	Approval Chief Eng / Prod Mgr	Approval QC Inspector

Part No: _____ **PAR #:** _____ **Fault Category:** _____ **NCR:** Yes No **DQA:** _____ **Date:** _____

Resolution: _____ **Disposition:** _____ **QA: N/C Closed:** _____ **Date:** _____

NCR:		WORK ORDER NON-CONFORMANCE (NCR)						
DATE	STEP	Description of NC Section A	Corrective Action Section B			Verification Section C	Approval Chief Eng	Approval QC Inspector
			Initial Chief Eng	Action Description Chief Eng	Sign & Date			

NOTE: Date & initial all entries

H:\fFORMS\Quality Assurance\approved QA\NCRWO RevE

Work Order ID 69455

Wednesday, May 11, 2011 10:37:36 AM

Item ID: D206-642-541 **Accept** **Setup Start** **Stop**

Revision ID:

Item Name: Replacement Skidtube

Start Date: 5/11/2011 **Start Qty:** 1.00 **Cust Item ID:**

Required Date: 6/6/2011 **Req'd Qty:** 1.00 **Customer:**

Reference:

Run Start **Stop**

Approvals: **Process Plan:** _____ **Date:** _____ **Tooling:** _____ **Date:** _____

QC: _____ **Date:** _____ **SPC (Y/N):** _____ **Date:** _____

Sequence ID/ Work Center ID	Operation Description	Set Up/ Run Hours	Tool ID	Tool #	Plan Code	Accept Qty	Reject Qty	Reject Number	Insp. Stamp
200	QC5- Inspect part completeness to step on W/O	0.00							
QC	Memo	0.00							
Quality Control									
210	QC10- Inspect visual per QSI004- ground welds	0.00							
QC	Memo	0.00							
Quality Control									
220	Pressure Wash per QSI005 4.3	0.00							
HandFinish	Memo	0.00							
Hand Finishing	Re-alodine tube as per QSI 005 section 4.1.2.1 do not acid etch								

Dart Aerospace Ltd

W/O:		WORK ORDER CHANGES					
DATE	STEP	PROCEDURE CHANGE	By	Date	Qty	Approval Chief Eng / Prod Mgr	Approval QC Inspector

Part No: _____ **PAR #:** _____ **Fault Category:** _____ **NCR:** Yes No **DQA:** _____ **Date:** _____

Resolution: _____ **Disposition:** _____ **QA: N/C Closed:** _____ **Date:** _____

NCR:		WORK ORDER NON-CONFORMANCE (NCR)						
DATE	STEP	Description of NC Section A	Corrective Action Section B			Verification Section C	Approval Chief Eng	Approval QC Inspector
			Initial Chief Eng	Action Description Chief Eng	Sign & Date			

NOTE: Date & initial all entries

H:\fFORMS\Quality Assurance\approved QA\NCRWO RevE

Work Order ID 69455

Wednesday, May 11, 2011 10:37:36 AM

Item ID: D206-642-541 **Accept** **Setup Start** **Stop**

Revision ID:

Item Name: Replacement Skidtube

Start Date: 5/11/2011 **Start Qty:** 1.00 **Cust Item ID:**

Required Date: 6/6/2011 **Req'd Qty:** 1.00 **Customer:**

Reference:

Run Start **Stop**

Approvals: **Process Plan:** _____ **Date:** _____ **Tooling:** _____ **Date:** _____

QC: _____ **Date:** _____ **SPC (Y/N):** _____ **Date:** _____

Sequence ID/ Work Center ID	Operation Description	Set Up/ Run Hours	Tool ID	Tool #	Plan Code	Accept Qty	Reject Qty	Reject Number	Insp. Stamp
230	White Gloss(Ref:4.3.5.1) per QSI005 4.3-Alum	0.00				1X	Ø	M	11/07/11
Powdercoat	**Memo**	0.00							
Powder Coating	START TIME: 9:30 OVEN TEMPERATURE: 320 °F FINISH TIME: 10:00								
M117745									
240	QC3- Inspect Part Finish	0.00				1	Ø	HL	11/07/11
QC	**Memo**	0.00							
Quality Control									
250	HandFinishing	0.00				1	Ø	HL	11/07/11
HandFinish	**Memo**	0.00							
Hand Finishing	1-Install Nut Plate as per Dwg D3274. Apply LPS-3 to Nut Plate and rivets. A/R☐N/A☐LPS-3☐ M110995 6 2-Install inserts as per Dwg D3274. Use a drop of Sikaflex inside insert holes a A/R☐☐Sikaflex-291 ☐ M117516 Sikaflex expire date: ☐ 15/01								

Dart Aerospace Ltd

W/O:		WORK ORDER CHANGES					
DATE	STEP	PROCEDURE CHANGE	By	Date	Qty	Approval Chief Eng / Prod Mgr	Approval QC Inspector

Part No: _____ **PAR #:** _____ **Fault Category:** _____ **NCR:** Yes No **DQA:** _____ **Date:** _____

Resolution: _____ **Disposition:** _____ **QA: N/C Closed:** _____ **Date:** _____

NCR:		WORK ORDER NON-CONFORMANCE (NCR)						
DATE	STEP	Description of NC Section A	Corrective Action Section B			Verification Section C	Approval Chief Eng	Approval QC Inspector
			Initial Chief Eng	Action Description Chief Eng	Sign & Date			

NOTE: Date & initial all entries

H:\fFORMS\Quality Assurance\approved QA\NCRWO RevE

Work Order ID 69455

Wednesday, May 11, 2011 10:37:36 AM

Item ID: D206-642-541 **Accept** **Setup Start** **Stop**

Revision ID:

Item Name: Replacement Skidtube

Start Date: 5/11/2011 **Start Qty:** 1.00 **Cust Item ID:**

Required Date: 6/6/2011 **Req'd Qty:** 1.00 **Customer:**

Reference:

Run Start **Stop**

Approvals: **Process Plan:** _____ **Date:** _____ **Tooling:** _____ **Date:** _____

QC: _____ **Date:** _____ **SPC (Y/N):** _____ **Date:** _____

Sequence ID/ Work Center ID	Operation Description	Set Up/ Run Hours	Tool ID	Tool #	Plan Code	Accept Qty	Reject Qty	Reject Number	Insp. Stamp
260	QC5- Inspect part completeness to step on W/O	0.00							
QC	**Memo**	0.00							
Quality Control	Inspect Nut Plate & Inserts								
270		0.00							
HandFinish	HAND FINISHING RESOURCE #1					1	0		
Hand Finishing	**Memo**	0.00							

1-Install wearpads & gaskets as per Dwg D3274.

2-Install ring as per Dwg D3274
A/R Sikaflex-291 M117516
Sikaflex expire date: 15 Oct

3-Inspect for foreign objects as per QSI 024

4-Spray inside of tube on both sides of web with LPS-3
A/R LPS-3 Batch: N/A

5-Install Aft Cap and seal with Sikaflex. Clean excess adhesive.
A/R Sikaflex-291 M117516
Sikaflex expire date: 15 Oct

Dart Aerospace Ltd

W/O:		WORK ORDER CHANGES					
DATE	STEP	PROCEDURE CHANGE	By	Date	Qty	Approval Chief Eng / Prod Mgr	Approval QC Inspector

Part No: _____ **PAR #:** _____ **Fault Category:** _____ **NCR:** Yes No **DQA:** _____ **Date:** _____

Resolution: _____ **Disposition:** _____ **QA: N/C Closed:** _____ **Date:** _____

NCR:		WORK ORDER NON-CONFORMANCE (NCR)						
DATE	STEP	Description of NC Section A	Corrective Action Section B			Verification Section C	Approval Chief Eng	Approval QC Inspector
			Initial Chief Eng	Action Description Chief Eng	Sign & Date			

NOTE: Date & initial all entries

H:\fFORMS\Quality Assurance\approved QA\NCRWO RevE

Work Order ID 69455

Wednesday, May 11, 2011 10:37:36 AM

Item ID: D206-642-541 **Accept** **Setup Start**

Revision ID: **Stop**

Item Name: Replacement Skidtube

Start Date: 5/11/2011 **Start Qty:** 1.00 **Cust Item ID:**

Required Date: 6/6/2011 **Req'd Qty:** 1.00 **Customer:**

Reference:

Run Start

Approvals: **Process Plan:** _____ **Date:** _____ **Tooling:** _____ **Date:** _____

Stop

QC: _____ **Date:** _____ **SPC (Y/N):** _____ **Date:** _____

Sequence ID/ Work Center ID	Operation Description	Set Up/ Run Hours	Tool ID	Tool #	Plan Code	Accept Qty	Reject Qty	Reject Number	Insp. Stamp
280	QC5- Inspect part completeness to step on W/O	0.00							
QC	Memo	0.00							
Quality Control									
290	Identify as per dwg & Stock Location: PP 69442	0.00							
Packaging	Memo	0.00							
Packaging									
300	QC21- Final Inspection - Work Order Release	0.00							
QC	Memo	0.00							
Quality Control									

11/7/26

11/7/26

11-07-24

Dart Aerospace Ltd

W/O:		WORK ORDER CHANGES					
DATE	STEP	PROCEDURE CHANGE	By	Date	Qty	Approval Chief Eng / Prod Mgr	Approval QC Inspector

Part No: _____ **PAR #:** _____ **Fault Category:** _____ **NCR:** Yes No **DQA:** _____ **Date:** _____

Resolution: _____ **Disposition:** _____ **QA: N/C Closed:** _____ **Date:** _____

NCR:		WORK ORDER NON-CONFORMANCE (NCR)						
DATE	STEP	Description of NC Section A	Corrective Action Section B			Verification Section C	Approval Chief Eng	Approval QC Inspector
			Initial Chief Eng	Action Description Chief Eng	Sign & Date			

NOTE: Date & initial all entries

H:\fFORMS\Quality Assurance\approved QA\NCRWO RevE

Picklist Print

Wednesday, May 11, 2011 10:37:48 AM

8

Work Order ID: 69455

Parent Item: D206-642-541

Parent Item Name: Replacement Skidtube

Start Date: 5/11/2011 **Required Date:** 6/6/2011

Start Qty: 1.00 **Required Qty:** 1.00

Comments:
IPP Rev:B□05.09.23□Revised per D206-642 Rev. J□KJ/JLM
IPP Rev:C 07-02-23 Added SS Wearplates & Gaskets JLM□
IPP Rev:D 07-12-06 replace NAS1515H3L to D3672-1 DD
IPP Rev:E 08-04-17 as per PAR 08-015 DD verified by:EC
IPP Rev:F 08-06-02 add comment DD verified by:EC
IPP Rev:G 08-10-09 revise details DD verified byEC

Component Item ID/ Item Name	Replacement Item ID	Mfg/ Purch	Bin Item	Primary Location	Last Location	Route Seq ID	Unit of Measure	Qty on Hand	Qty per Kit	Total Qty	Qty Issued	Date Issued	Status
D2600-1-190		Manufactured	No			110	Each	34.4000	1	1			
Extrusion Round 3" 206													
				Location			**Loc Qty**		**Loc Code**				
				HALL			34.4						
				59874			34.4						
D3285-1		Manufactured	No			110	Each	110.0000	1	1			
Cap													
				Location			**Loc Qty**		**Loc Code**				
				LG002			110						
					52511		63						
					52647		47						
D3282-041		Manufactured	No			150	Each	9.0000	1	1			
Float Web (206L/407)													
				Location			**Loc Qty**		**Loc Code**				
				LG			9						
					65293		2						
					66363		7						

1 11-5-26

8E 11/06/03

BB 11/06/08

Dart Aerospace Ltd

W/O:		WORK ORDER CHANGES					
DATE	STEP	PROCEDURE CHANGE	By	Date	Qty	Approval Chief Eng / Prod Mgr	Approval QC Inspector

Part No: _____ **PAR #:** _____ **Fault Category:** _____ **NCR:** Yes No **DQA:** _____ **Date:** _____

Resolution: _____ **Disposition:** _____ **QA: N/C Closed:** _____ **Date:** _____

NCR:		WORK ORDER NON-CONFORMANCE (NCR)						
DATE	STEP	Description of NC Section A	Corrective Action Section B			Verification Section C	Approval Chief Eng	Approval QC Inspector
			Initial Chief Eng	Action Description Chief Eng	Sign & Date			

NOTE: Date & initial all entries

H:\fFORMS\Quality Assurance\approved QA\NCRWO RevE

Picklist Print

Wednesday, May 11, 2011 10:37:48 AM

Work Order ID: 69455

Parent Item: D206-642-541

Parent Item Name: Replacement Skidtube

Start Date: 5/11/2011 **Required Date:** 6/6/2011

Start Qty: 1.00 **Required Qty:** 1.00

D2649	Manufactured	No	190	Each	199.0000	12	12	BE 11/06/28
Cross Bolt Spacer							B 70394 × 12	

Location		Loc Qty	Loc Code	
LG		85		
	68224	85		
LG001		114		
	65317	1		
	68507	113		

D3275-1	Manufactured	No	190	Each	262.0000	12	12	BE 11/06/28
Crossbolt Spacer								

Location		Loc Qty	Loc Code	
LG		71		
	67767	71		12
LG002		191		
	66109	11		
	66930	108		
	68946	72		

CR3212-4-03	Purchased	No	250	Each	1,254.000	2	2	11/07/11
Cherry Rivet								

Location		Loc Qty	Loc Code	
FP-B		16		
	110139	16		
ST311		1238		
	114859	1238		x2

Dart Aerospace Ltd

W/O:		WORK ORDER CHANGES					
DATE	STEP	PROCEDURE CHANGE	By	Date	Qty	Approval Chief Eng / Prod Mgr	Approval QC Inspector

Part No: _____ **PAR #:** _____ **Fault Category:** _____ **NCR:** Yes No **DQA:** _____ **Date:** _____

Resolution: _____ **Disposition:** _____ **QA: N/C Closed:** _____ **Date:** _____

NCR:		WORK ORDER NON-CONFORMANCE (NCR)						
DATE	STEP	Description of NC Section A	Corrective Action Section B			Verification Section C	Approval Chief Eng	Approval QC Inspector
			Initial Chief Eng	Action Description Chief Eng	Sign & Date			

NOTE: Date & initial all entries

H:\fFORMS\Quality Assurance\approved QA\NCRWO RevE

Picklist Print

Wednesday, May 11, 2011 10:37:49 AM

Work Order ID: 69455

Parent Item: D206-642-541

Parent Item Name: Replacement Skidtube

Start Date: 5/11/2011 **Required Date:** 6/6/2011

Start Qty: 1.00 **Required Qty:** 1.00

D3415-041	Manufactured	No	250	Each	68.0000	1	1	
Nut Plate								11/07/11

Location		Loc Qty	Loc Code	
ST053		68		
	33842	24		X1
	67605	44		

CCR264SS3-3	Purchased	No	250	Each	139.0000	2	2	
Cherry Rivet								11/07/11

Location		Loc Qty	Loc Code	
FP-B		2		
	113973	2		
ST311		137		
	113973	2		
	117086	135		2

ALS4-1032-130	Purchased	No	250	Each	1,000.000	78	78	
Insert								11/07/11

Location		Loc Qty	Loc Code	
ST281		1000		
	117331	1000	M117719	X78

D3536-15	Manufactured	No	270	Each	25.0000	1	1	
Gasket								11/07/11

Location		Loc Qty	Loc Code	
FP011		25		
	66559	25		X1

Dart Aerospace Ltd

W/O:		WORK ORDER CHANGES					
DATE	STEP	PROCEDURE CHANGE	By	Date	Qty	Approval Chief Eng / Prod Mgr	Approval QC Inspector

Part No: _____ **PAR #:** _____ **Fault Category:** _____ **NCR:** Yes No **DQA:** _____ **Date:** _____

Resolution: _____ **Disposition:** _____ **QA: N/C Closed:** _____ **Date:** _____

NCR:		WORK ORDER NON-CONFORMANCE (NCR)						
DATE	STEP	Description of NC Section A	Corrective Action Section B			Verification Section C	Approval Chief Eng	Approval QC Inspector
			Initial Chief Eng	Action Description Chief Eng	Sign & Date			

NOTE: Date & initial all entries

Picklist Print

Wednesday, May 11, 2011 10:37:49 AM

Work Order ID: 69455

Parent Item: D206-642-541

Parent Item Name: Replacement Skidtube

Start Date: 5/11/2011 **Required Date:** 6/6/2011

Start Qty: 1.00 **Required Qty:** 1.00

D3536-23	Manufactured	No	270	Each	23.0000	1	1	
Gasket								

Location		Loc Qty	Loc Code	
FP011		23		
	43406	1		
	53468	1		
	66560	21		yl

D3536-35	Manufactured	No	270	Each	17.0000	1	1	
Gasket								

Location		Loc Qty	Loc Code	
FP012		17		
	66237	5	B69755	yl
	67599	12		

D3536-39	Manufactured	No	270	Each	17.0000	1	1	
Gasket								

Location		Loc Qty	Loc Code	
FP015		17		yl
	63578	5	B~~646~~76	
	66241	12		

D3535-15	Manufactured	No	270	Each	19.0000	1	1	
Wearshoe								

Location		Loc Qty	Loc Code	
FP018		19		yl
	66558	12		
	68358	7		

Dart Aerospace Ltd

W/O:		WORK ORDER CHANGES					
DATE	STEP	PROCEDURE CHANGE	By	Date	Qty	Approval Chief Eng / Prod Mgr	Approval QC Inspector

Part No: _____ **PAR #:** _____ **Fault Category:** _____ **NCR:** Yes No **DQA:** _____ **Date:** _____

Resolution: _____ **Disposition:** _____ **QA: N/C Closed:** _____ **Date:** _____

NCR:		WORK ORDER NON-CONFORMANCE (NCR)						
DATE	STEP	Description of NC Section A	Corrective Action Section B			Verification Section C	Approval Chief Eng	Approval QC Inspector
			Initial Chief Eng	Action Description Chief Eng	Sign & Date			

NOTE: Date & initial all entries

H:\fFORMS\Quality Assurance\approved QA\NCRWO RevE

Picklist Print

Wednesday, May 11, 2011 10:37:49 AM

Work Order ID: 69455

Parent Item: D206-642-541

Parent Item Name: Replacement Skidtube

Start Date: 5/11/2011 **Required Date:** 6/6/2011

Start Qty: 1.00 **Required Qty:** 1.00

D3535-35	Manufactured	No	270	Each	21.0000	1	1	
Wearshoe								

Location	Loc Qty	Loc Code	
FP018	21		
65926	3		
67598	8		
68348	10		X

D3535-39	Manufactured	No	270	Each	12.0000	1	1	
Wearshoe								

Location	Loc Qty	Loc Code	
FP018	12		
64076	12		X

D3535-23	Manufactured	No	270	Each	31.0000	1	1	
Wearshoe								

Location	Loc Qty	Loc Code	
FP021	31		
66236	5		
67594	13		X
68342	13		

D3537-3	Manufactured	No	270	Each	13.0000	1	1	
Wearpad								

Location	Loc Qty	Loc Code	
FP017	13	1370817	X
35697	1		
66230	12		

Dart Aerospace Ltd

W/O:		WORK ORDER CHANGES					
DATE	STEP	PROCEDURE CHANGE	By	Date	Qty	Approval Chief Eng / Prod Mgr	Approval QC Inspector

Part No: _____ **PAR #:** _____ **Fault Category:** _____ **NCR:** Yes No **DQA:** _____ **Date:** _____

Resolution: _____ **Disposition:** _____ **QA: N/C Closed:** _____ **Date:** _____

NCR:		WORK ORDER NON-CONFORMANCE (NCR)						
DATE	STEP	Description of NC Section A	Corrective Action Section B			Verification Section C	Approval Chief Eng	Approval QC Inspector
			Initial Chief Eng	Action Description Chief Eng	Sign & Date			

NOTE: Date & initial all entries

H:\fFORMS\Quality Assurance\approved QA\NCRWO RevE

Picklist Print

Wednesday, May 11, 2011 10:37:50 AM

Work Order ID: 69455

Parent Item: D206-642-541

Parent Item Name: Replacement Skidtube

Start Date: 5/11/2011 **Required Date:** 6/6/2011

Start Qty: 1.00 **Required Qty:** 1.00

D3537-1		Manufactured	No	270	Each	56.0000	9	9	
Wearpad									

Location		Loc Qty	Loc Code	
FP017		56	B70686	x9
	63313	2		
	66135	2		
	66804	48		
	66935	4		

AN960C10L	NAS1149C0332 R	Purchased	No	270	Each	0.0000	80	80	
washer						M118179		(x80)	JH 11/07/11
AN960C416	~~NAS1149C0463~~ R	Purchased	No	270	Each	0.0000	1	1	
washer						M115358		(x1)	JH 11/07/11
D3672-1		Manufactured	No	270	Each	1,371.000	2	2	
Phenolic Washer									JH 11/07/11

Location		Loc Qty	Loc Code	
FP-A		21		
	52505	21		
ST074		1350		
	64177	850		x2
	66821	500		

Dart Aerospace Ltd

W/O:		WORK ORDER CHANGES					
DATE	STEP	PROCEDURE CHANGE	By	Date	Qty	Approval Chief Eng / Prod Mgr	Approval QC Inspector

Part No: _____ **PAR #:** _____ **Fault Category:** _____ **NCR:** Yes No **DQA:** _____ **Date:** _____

Resolution: _____ **Disposition:** _____ **QA: N/C Closed:** _____ **Date:** _____

NCR:		WORK ORDER NON-CONFORMANCE (NCR)						
DATE	STEP	Description of NC Section A	Corrective Action Section B			Verification Section C	Approval Chief Eng	Approval QC Inspector
			Initial Chief Eng	Action Description Chief Eng	Sign & Date			

NOTE: Date & initial all entries

H:\fFORMS\Quality Assurance\approved QA\NCRWO RevE

Picklist Print

Wednesday, May 11, 2011 10:37:50 AM

Work Order ID: 69455

Parent Item: D206-642-541

Parent Item Name: Replacement Skidtube

Start Date: 5/11/2011 **Required Date:** 6/6/2011

Start Qty: 1.00 **Required Qty:** 1.00

AN3C4A	Purchased	No	270	Each	1,662.000	80	80	
BOLT								

Location	Loc Qty	Loc Code	
ST350	1662	M118112	x 80
117094	964		
117313	698		

AN4C5A	Purchased	No	270	Each	532.0000	1	1	
BOLT								

Location	Loc Qty	Loc Code	
FP-B	116		
~~112243~~	116		x1
ST345	416		
112243	416		

D2646	Manufactured	No	270	Each	42.0000	1	1	
Aft Cap								

Location	Loc Qty	Loc Code	
FP006	41	B68280	x1
62678	41		
FP-4	1		
69019	1		

Dart Aerospace Ltd

W/O:		WORK ORDER CHANGES					
DATE	STEP	PROCEDURE CHANGE	By	Date	Qty	Approval Chief Eng / Prod Mgr	Approval QC Inspector

Part No: _____ **PAR #:** _____ **Fault Category:** _____ **NCR:** Yes No **DQA:** _____ **Date:** _____

Resolution: _____ **Disposition:** _____ **QA: N/C Closed:** _____ **Date:** _____

NCR:		WORK ORDER NON-CONFORMANCE (NCR)						
DATE	STEP	Description of NC Section A	Corrective Action Section B			Verification Section C	Approval Chief Eng	Approval QC Inspector
			Initial Chief Eng	Action Description Chief Eng	Sign & Date			

NOTE: Date & initial all entries

H:\fFORMS\Quality Assurance\approved QA\NCRWO RevE

Picklist Print

Wednesday, May 11, 2011 10:37:50 AM

Work Order ID: 69455

Parent Item: D206-642-541

Parent Item Name: Replacement Skidtube

Start Date: 5/11/2011 **Required Date:** 6/6/2011

Start Qty: 1.00 **Required Qty:** 1.00

D3413-1	Manufactured	No	270	Each	36.0000	1	1	
Ring								

Location		Loc Qty	Loc Code	
ST420		19		
	62961	8		
	66387	11		
ST473		17		
	65294	3		
	66945	14		X1

Dart Aerospace Ltd

W/O:		WORK ORDER CHANGES					
DATE	STEP	PROCEDURE CHANGE	By	Date	Qty	Approval Chief Eng / Prod Mgr	Approval QC Inspector

Part No: _____ **PAR #:** _____ **Fault Category:** _____ **NCR:** Yes No **DQA:** _____ **Date:** _____

Resolution: _____ **Disposition:** _____ **QA: N/C Closed:** _____ **Date:** _____

NCR:		WORK ORDER NON-CONFORMANCE (NCR)						
DATE	STEP	Description of NC Section A	Corrective Action Section B			Verification Section C	Approval Chief Eng	Approval QC Inspector
			Initial Chief Eng	Action Description Chief Eng	Sign & Date			

NOTE: Date & initial all entries

H:\fFORMS\Quality Assurance\approved QA\NCRWO RevE

DESIGN	DRAWN BY	DART AEROSPACE USA, INC. PORT HADLOCK, WA
CP	PH	
CHECKED	APPROVED	DRAWING NO. D3274 — REV. D — SHEET 1 OF 4
DATE 06.12.19		TITLE SKIDTUBE ASSEMBLY — SCALE NTS

A	04.03.15	NEW ISSUE
B	04.08.09	MOVE SADDLE HOLE: 42.14 WAS 42.76
C	05.03.16	ADD −043; NEW INSERTS
D	06.12.19	NEW INSERTS, SS WEARSHOE + GASKET

RELEASED
07.02.12
DEO ATTACHED

Qty -041	Qty -043	Part Number	Description
X		D3274-041	SKIDTUBE ASSEMBLY
	X	D3274-043	SKIDTUBE ASSEMBLY
1	1	D2600-1-240	EXTRUSION
1	1	D2646	AFT CAP
12	12	D2649	CROSS BOLT SPACER
12	37	D3275-1	CROSS BOLT SPACER
1	1	D3282-041	FLOAT WEB
1	1	D3285-1	CAP
1	1	D3413-1	RING
1	1	D3415-041	NUT PLATE
1	1	D3535-15	WEARSHOE
1	1	D3535-23	WEARSHOE
1	1	D3535-35	WEARSHOE
1	1	D3535-39	WEARSHOE
1	1	D3536-15	GASKET
1	1	D3536-23	GASKET
1	1	D3536-35	GASKET
1	1	D3536-39	GASKET
9	9	D3537-1	WEARPAD
1	1	D3537-3	WEARPAD
78	78	ALS7-1032-130	INSERT (or AKS4-1032-130, ALS4-1032-130, AELS-1032-130)
80	80	AN3C4A	BOLT
1	1	AN4C5A	BOLT
1	1	AN960C416	WASHER
80	80	AN960C10L	WASHER
2	2	CCR264SS3-3	RIVET
2	2	CR3212-4-03	RIVET
2	2	NAS1515H3L	WASHER

SHOP COPY
RETURN TO
ENGINEERING
UNCONTROLLED COPY
SUBJECT TO AMENDMENT
WITHOUT NOTICE
WORK ORDER
NO. 69455
11-05-11

GENERAL NOTES:

1. TOLERANCES ARE PER DART QSI 018 UNLESS OTHERWISE NOTED.
2. DAMAGE TOLERANCE ON FWD BEND:
   THERE SHOULD BE NO VISIBLE WRINKLES IN THE BEND FROM THE GROUND TO A HEIGHT OF 7 INCHES ABOVE THE GROUND. IT IS ACCEPTABLE TO POLISH OUT GOUGES UP TO 0.020 DEEP IN THE BENT PORTION OF THE TUBE. A MAXIMUM REDUCTION IN DIAMETER OF 0.150" IS ACCEPTABLE IN THE BENT PORTION OF THE TUBE.
3. ALL HOLES DRILLED ON CENTERLINES.
4. BOND D3282-041 FLOAT WEB INTO D3274-1/-3 OUTER TUBE WITH NON-STRUCTURAL SIKAFLEX-241/291 ADHESIVE PER DART QSI 015. ENSURE HOLES LINE-UP.
5. WELDING TO BE DONE PER DART QSI 004.
6. FINISH: - ACID ETCH, ALODINE ASSEMBLY PER DART QSI 005 4.1
   - POWDER COAT WHITE (REF. 4.3.5.1) PER DART QSI 005 4.3
7. DRILL Ø0.297 HOLES FOR ALS7-1032-130 INSERTS USING DT3274-1T2 BEFORE FINISH. INSTALL ALS7-1032-130 INSERTS AFTER FINISH. SEAL WEARSHOE BOLTS WITH SIKAFLEX -241/-291.
8. SPRAY INSIDE OF TUBE WITH A COAT OF LPS LABORATORIES "LPS-3" AFTER FINISH AND INSTALLATION OF INSERTS. COAT ALL EXPOSED FASTENERS WITH LPS LABORATORIES "LPS PROCYON" AFTER FINAL ASSEMBLY, CLEAN EXCESS OFF POWDER COATING WITH MEK DEGREASER.

Copyright © 2004 by DART AEROSPACE USA, INC.
THIS DOCUMENT IS PRIVATE AND CONFIDENTIAL AND IS SUPPLIED ON THE EXPRESS CONDITION THAT IT IS NOT TO BE USED FOR ANY PURPOSE OR COPIED OR COMMUNICATED TO ANY OTHER PERSON WITHOUT WRITTEN PERMISSION FROM DART AEROSPACE USA, INC.

Dart Aerospace Ltd

W/O:		WORK ORDER CHANGES					
DATE	STEP	PROCEDURE CHANGE	By	Date	Qty	Approval Chief Eng / Prod Mgr	Approval QC Inspector

Part No: _____ **PAR #:** _____ **Fault Category:** _____ **NCR:** Yes No **DQA:** _____ **Date:** _____

Resolution: _____ **Disposition:** _____ **QA: N/C Closed:** _____ **Date:** _____

NCR:		WORK ORDER NON-CONFORMANCE (NCR)						
DATE	STEP	Description of NC Section A	Corrective Action Section B			Verification Section C	Approval Chief Eng	Approval QC Inspector
			Initial Chief Eng	Action Description Chief Eng	Sign & Date			

NOTE: Date & initial all entries

H:\FORMS\Quality Assurance\approved QA\NCRWO RevE

w/o 69455

DEO ATTACHED

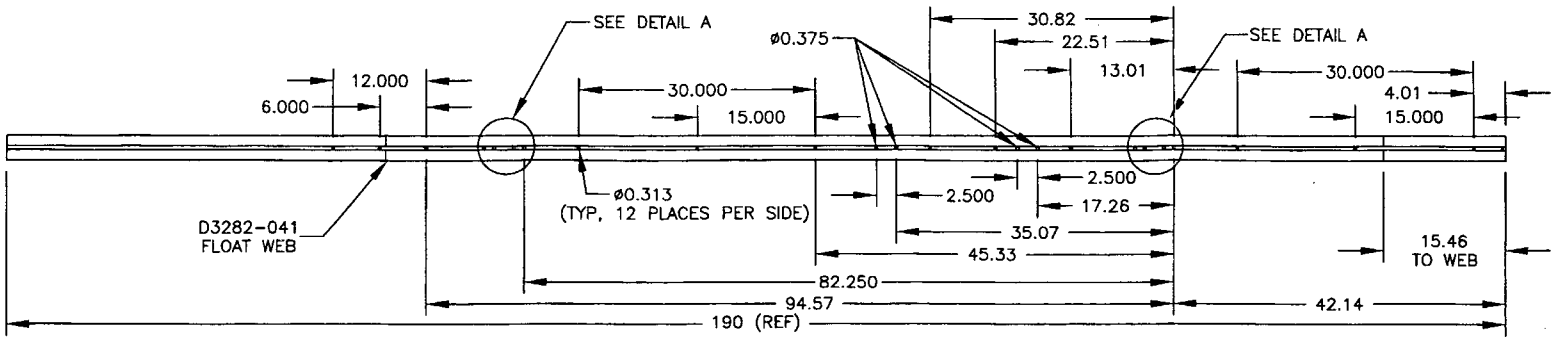

D3274-041 DRILLING/ASSEMBLY DETAIL

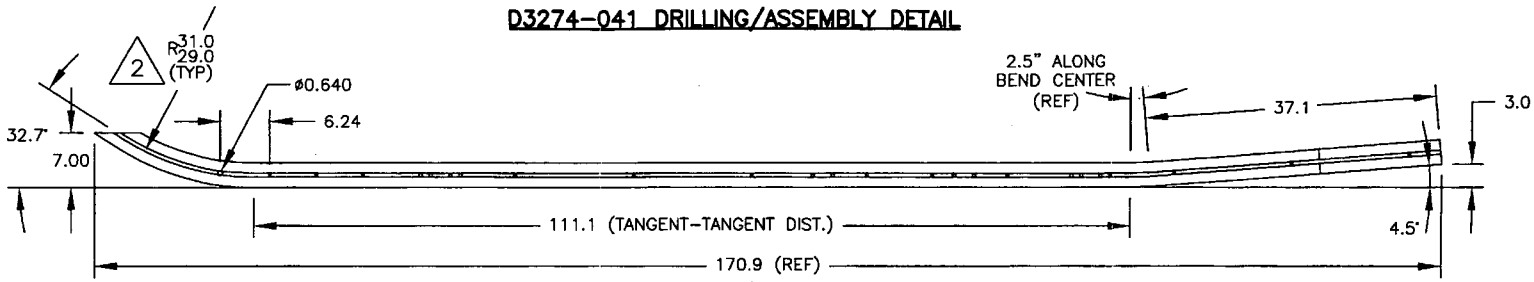

D3274-041 BEND/DRILLING DETAIL

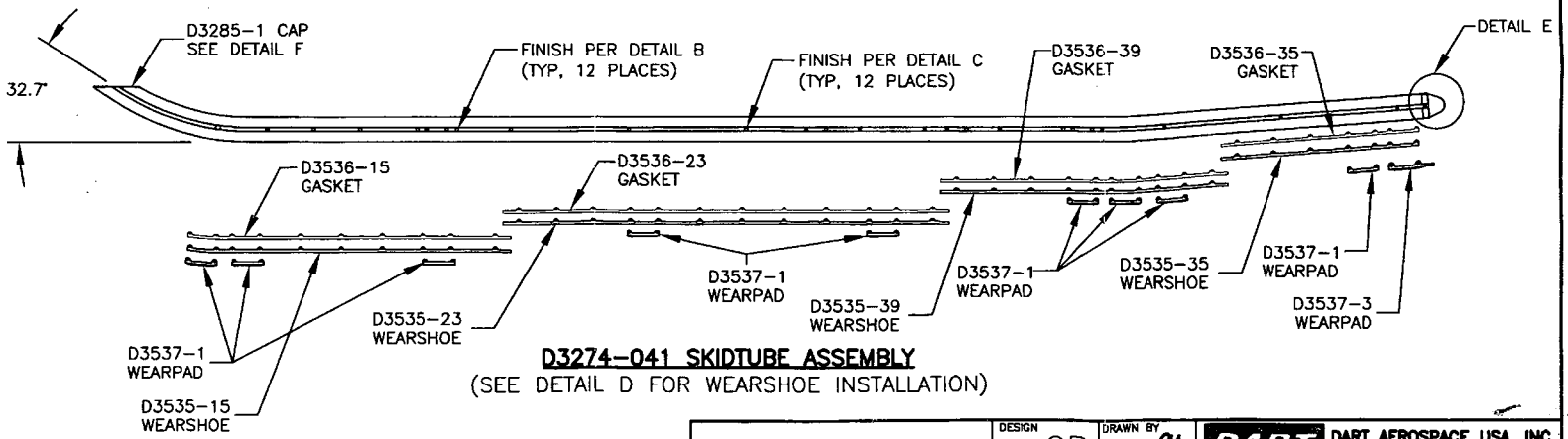

D3274-041 SKIDTUBE ASSEMBLY

(SEE DETAIL D FOR WEARSHOE INSTALLATION)

RELEASED
07.02.12

COPYRIGHT © 2004 BY DART AEROSPACE USA, INC.

THIS DOCUMENT IS PRIVATE AND CONFIDENTIAL AND IS SUPPLIED ON THE EXPRESS CONDITION THAT IT IS NOT TO BE USED FOR ANY PURPOSE OR COPIED OR COMMUNICATED TO ANY OTHER PERSON WITHOUT WRITTEN PERMISSION FROM DART AEROSPACE USA, INC.

DESIGN: CP	DRAWN BY: AH	DART	DART AEROSPACE USA, INC. PORT HADLOCK, WA
CHECKED:	APPROVED:	DRAWING NO. D3274	REV. D SHEET 2 OF 4
DATE: 06.12.19		TITLE: SKIDTUBE ASSEMBLY	SCALE: 1:15

Dart Aerospace Ltd

W/O:		WORK ORDER CHANGES					
DATE	STEP	PROCEDURE CHANGE	By	Date	Qty	Approval Chief Eng / Prod Mgr	Approval QC Inspector

Part No: _____ **PAR #:** _____ **Fault Category:** _____ **NCR:** Yes No **DQA:** _____ **Date:** _____

Resolution: _____ **Disposition:** _____ **QA: N/C Closed:** _____ **Date:** _____

NCR:		WORK ORDER NON-CONFORMANCE (NCR)						
DATE	STEP	Description of NC Section A	Corrective Action Section B			Verification Section C	Approval Chief Eng	Approval QC Inspector
			Initial Chief Eng	Action Description Chief Eng	Sign & Date			

NOTE: Date & initial all entries

H:\fFORMS\Quality Assurance\approved QA\NCRWO RevE

w/o 6,9455

DEO ATTACHED

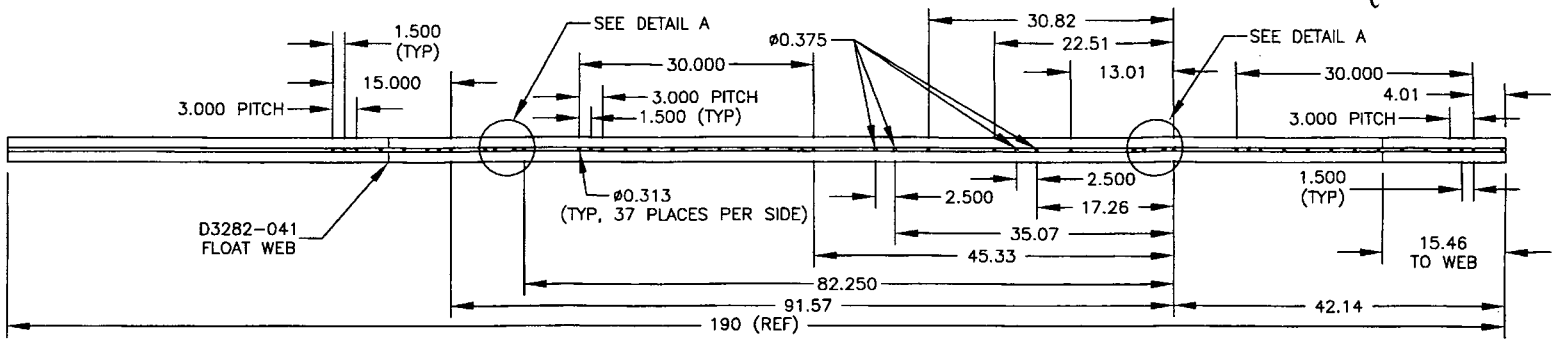

D3274-043 DRILLING/ASSEMBLY DETAIL

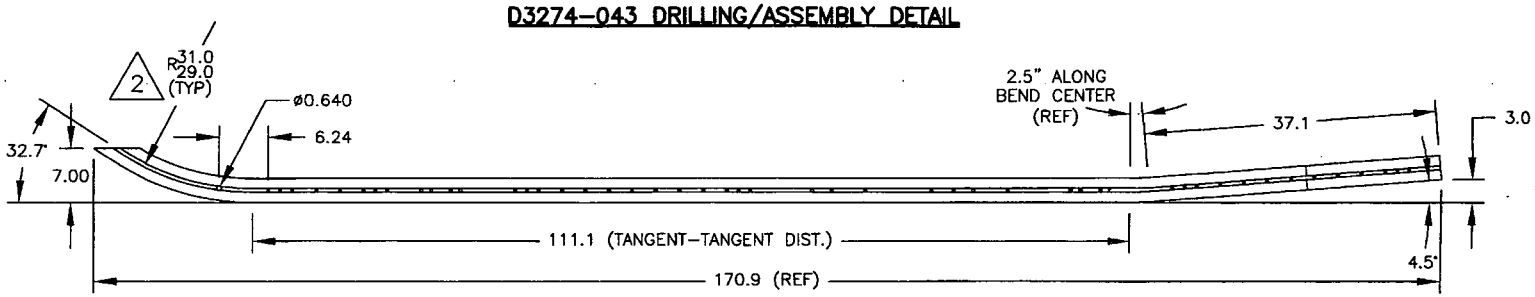

D3274-043 BEND/DRILLING DETAIL

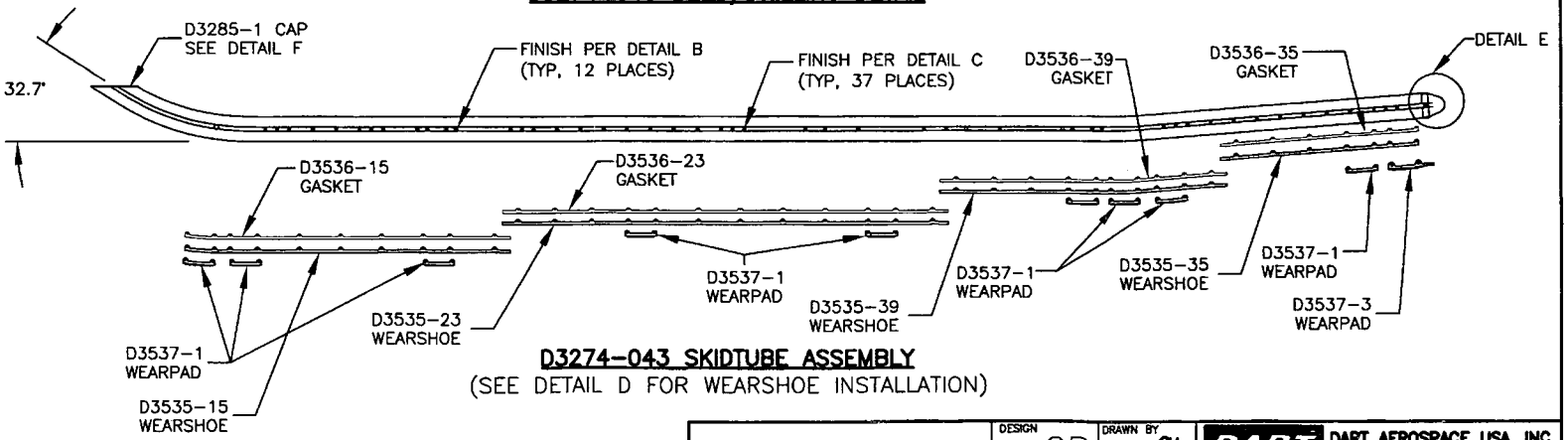

D3274-043 SKIDTUBE ASSEMBLY

(SEE DETAIL D FOR WEARSHOE INSTALLATION)

RELEASED
07.02.12

COPYRIGHT © 2004 BY DART AEROSPACE USA, INC.

THIS DOCUMENT IS PRIVATE AND CONFIDENTIAL AND IS SUPPLIED ON THE EXPRESS CONDITION THAT IT IS NOT TO BE USED FOR ANY PURPOSE OR COPIED OR COMMUNICATED TO ANY OTHER PERSON WITHOUT WRITTEN PERMISSION FROM DART AEROSPACE USA, INC.

DESIGN: CP	DRAWN BY: PH	DART AEROSPACE USA, INC. PORT HADLOCK, WA	
CHECKED:	APPROVED:	DRAWING NO. D3274	REV. D SHEET 3 OF 4
DATE: 06.12.19		TITLE: SKIDTUBE ASSEMBLY	SCALE: 1:15

Dart Aerospace Ltd

W/O:		WORK ORDER CHANGES					
DATE	STEP	PROCEDURE CHANGE	By	Date	Qty	Approval Chief Eng / Prod Mgr	Approval QC Inspector

Part No: _____ **PAR #:** _____ **Fault Category:** _____ **NCR:** Yes No **DQA:** _____ **Date:** _____

Resolution: _____ **Disposition:** _____ **QA: N/C Closed:** _____ **Date:** _____

NCR:		WORK ORDER NON-CONFORMANCE (NCR)						
DATE	STEP	Description of NC Section A	Corrective Action Section B			Verification Section C	Approval Chief Eng	Approval QC Inspector
			Initial Chief Eng	Action Description Chief Eng	Sign & Date			

NOTE: Date & initial all entries

H:\fFORMS\Quality Assurance\approved QA\NCRWO RevE

DETAIL A: DRILL DETAIL

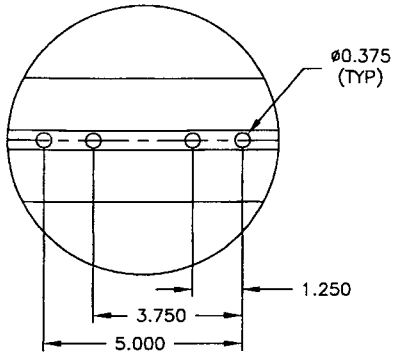

DETAIL B
FOR ø0.375 HOLES ONLY

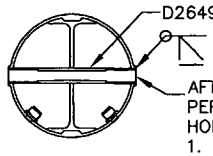

AFTER DRILLING AND BENDING ASSEMBLY PERFORM THE FOLLOWING FOR ø0.375 HOLES ONLY:
1. CHAMFER HOLE 0.030x45°
2. INSERT D2649 SPACER
3. WELD INTO PLACE AND GRIND FLUSH
4. C'BORE TO ø0.313x0.75 DEEP

DETAIL C
FOR ø0.313 HOLES ONLY

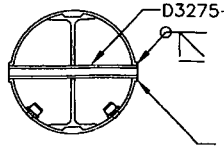

CHAMFER 0.030x45°
(TYP)

ECO 069455

DETAIL D

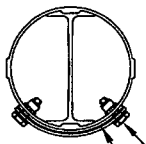

ALS7-1032-130 INSERT (1)
AN3C4A BOLT (1)
AN960C10L WASHER (1)
(78 PLACES)

GASKET/WEARSHOE/WEARPAD (REF)

DETAIL F: END FINISHING DETAIL

DETAIL F NOTES
1. CUT TUBE LEVEL
2. REMOVE RIDGE ON FWD SIDE
3. LOCATE D3285-1 (TRIM AS NECESSARY)
4. WELD D3285-1 IN PLACE PER DART QSI 004
5. GRIND FLUSH
6. RIVET D3415-041 NUT PLATE IN PLACE

NOTE: MASK THREADS IN D3415-041 PRIOR TO FINISH

DEO ATTACHED

RELEASED
07.02.12

DETAIL E

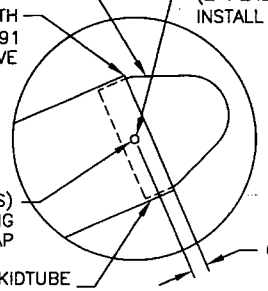

AN3C4A BOLT (1)
AN960C10L WASHER (1)
NAS1515H3L WASHER (1)
(2 PLACES)
INSTALL WITH SIKAFLEX-241/-291

COPYRIGHT © 2004 BY DART AEROSPACE USA, INC.

THIS DOCUMENT IS PRIVATE AND CONFIDENTIAL AND IS SUPPLIED ON THE EXPRESS CONDITION THAT IT IS NOT TO BE USED FOR ANY PURPOSE OR COPIED OR COMMUNICATED TO ANY OTHER PERSON WITHOUT WRITTEN PERMISSION FROM DART AEROSPACE USA, INC.

DESIGN: CP	DRAWN BY: PH	DART AEROSPACE USA, INC. PORT HADLOCK, WA	
CHECKED:	APPROVED:	DRAWING NO. D3274	REV. D SHEET 4 OF 4
DATE: 06.12.19		TITLE: SKIDTUBE ASSEMBLY	SCALE: 1:3

Dart Aerospace Ltd

W/O:		WORK ORDER CHANGES					
DATE	STEP	PROCEDURE CHANGE	By	Date	Qty	Approval Chief Eng / Prod Mgr	Approval QC Inspector

Part No: _____ **PAR #:** _____ **Fault Category:** _____ **NCR:** Yes No **DQA:** _____ **Date:** _____

Resolution: _____ **Disposition:** _____ **QA: N/C Closed:** _____ **Date:** _____

NCR:		WORK ORDER NON-CONFORMANCE (NCR)						
DATE	STEP	Description of NC Section A	Corrective Action Section B			Verification Section C	Approval Chief Eng	Approval QC Inspector
			Initial Chief Eng	Action Description Chief Eng	Sign & Date			

NOTE: Date & initial all entries

H:\fFORMS\Quality Assurance\approved QA\NCRWO RevE

DRAWING NO.	TITLE	REV. D	DART AEROSPACE USA, INC	D.E.O. NO.	SHEET NO.	SCALE
D3274	SKIDTUBE ASSEMBLY		ENGINEERING ORDER	D3274-D-1	SHEET 1 OF 1	NTS
DRAWN	CHECKED		MFG. APPR.	APPROVED	DE APPR.	
DATE 09.06.17	DATE 09.06.23		DATE 09/06/23	DATE 09/06/23	DATE 09.06.23	

LPS-3 IS NO LONGER USED DURING ASSEMBLY OF SKIDTUBE.

AMEND NOTE 8: "~~SPRAY INSIDE OF TUBE WITH A COAT OF LPS LABORATORIES 'LPS 3' AFTER FINISH AND INSTALLATION OF INSERTS.~~ COAT ALL EXPOSED FASTENERS WITH LPS LABORATORIES 'LPS PROCYON' AFTER FINAL ASSEMBLY, CLEAN EXCESS OFF POWDER COATING WITH MEK DEGREASER."

AMEND DETAIL F AS SHOWN:

w/o 19455

DETAIL F: END FINISHING DETAIL

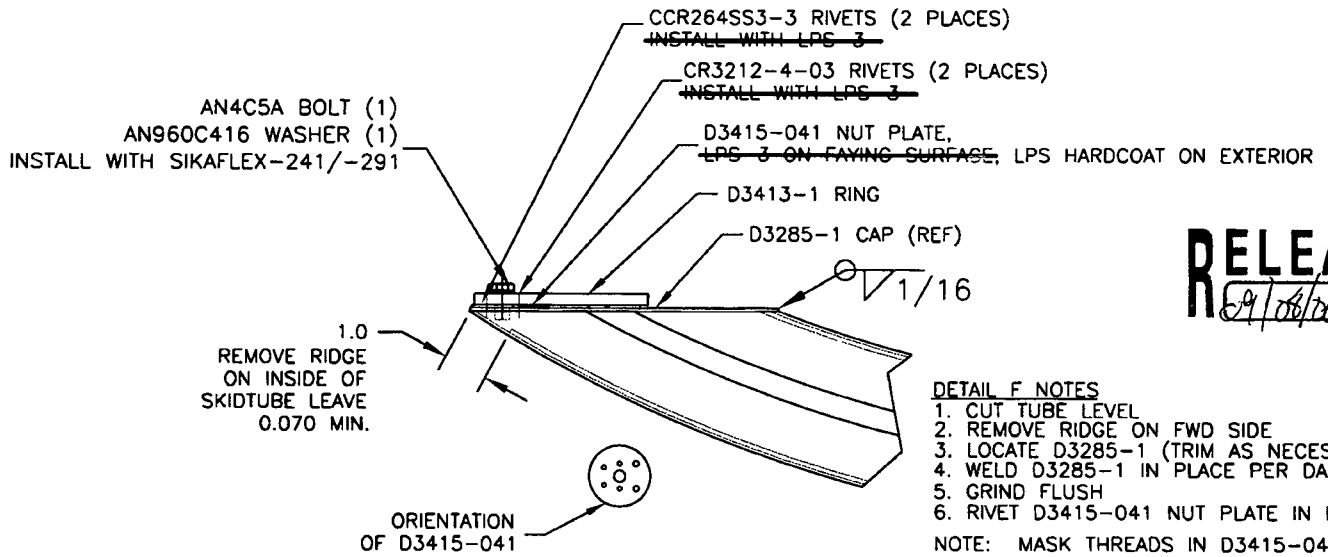

RELEASED 09/06/23

DETAIL F NOTES
1. CUT TUBE LEVEL
2. REMOVE RIDGE ON FWD SIDE
3. LOCATE D3285-1 (TRIM AS NECESSARY)
4. WELD D3285-1 IN PLACE PER DART QSI 004
5. GRIND FLUSH
6. RIVET D3415-041 NUT PLATE IN PLACE

NOTE: MASK THREADS IN D3415-041 PRIOR TO FINISH

COPYRIGHT © 2009 BY DART AEROSPACE USA, INC
THIS DOCUMENT IS PRIVATE AND CONFIDENTIAL AND IS SUPPLIED ON THE EXPRESS CONDITION THAT IT IS NOT TO BE USED FOR ANY PURPOSE OR COPIED OR COMMUNICATED TO ANY OTHER PERSON WITHOUT WRITTEN PERMISSION FROM DART AEROSPACE USA, INC.

Dart Aerospace Ltd

W/O:		WORK ORDER CHANGES					
DATE	STEP	PROCEDURE CHANGE	By	Date	Qty	Approval Chief Eng / Prod Mgr	Approval QC Inspector

Part No: _____ **PAR #:** _____ **Fault Category:** _____ **NCR:** Yes No **DQA:** _____ **Date:** _____

Resolution: _____ **Disposition:** _____ **QA: N/C Closed:** _____ **Date:** _____

NCR:		WORK ORDER NON-CONFORMANCE (NCR)						
DATE	STEP	Description of NC Section A	Corrective Action Section B			Verification Section C	Approval Chief Eng	Approval QC Inspector
			Initial Chief Eng	Action Description Chief Eng	Sign & Date			

NOTE: Date & initial all entries

H:\fFORMS\Quality Assurance\approved QA\NCRWO RevE

NO. ~~255~~ 255

AWS D17.1.2001
QUALIFICATION TEST RECORD

Name: Barklay Elliot
Job number: ~~69958~~ 69953
Part number: 1206-642-341
Description: 206
Welding Process: Tig[X] Mig[ ]
Base materiel:
Current: AC[X] DC[ ]

TEST REQUIREMENTS AND RESULTS

Visual:	pass[✓]	fail[ ]
Penetration:	pass[✓]	fail[ ]

UNACCEPTABLE

Cracks:	pass[✓]	fail[ ]
Undercut:	pass[✓]	fail[ ]
Pin holes:	pass[✓]	fail[ ]
Overlap (cold lap)	pass[✓]	fail[ ]
Porosity (surface):	pass[✓]	fail[ ]
Coloration:	pass[✓]	fail[ ]

Qualifier Pat Lewis **Date of Test Coupon** 11·06·14

Welder Barclay Elliot **Date of Test Coupon** 11/06/14

The above named individual is qualified in accordance with AWS D17.1.2001 to weld